# MEZZO®
Drawing Rack

- 24 Small 3/8" diameter holes
- 21 Medium 3/4" diameter holes
- 13 Large 1-1/4" x 1-7/8" football-shaped holes

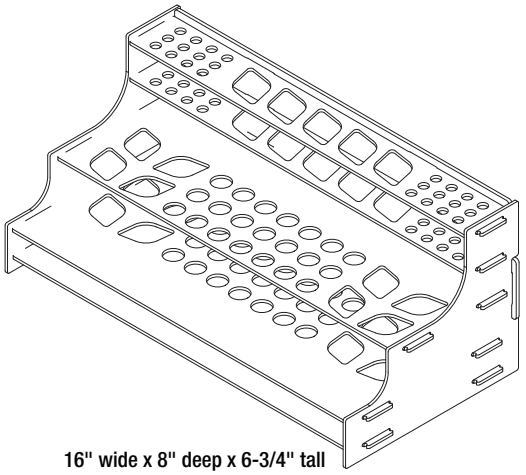

16" wide x 8" deep x 6-3/4" tall

## Assembly Guide

### Parts
Before you begin, lay out all pieces as shown below

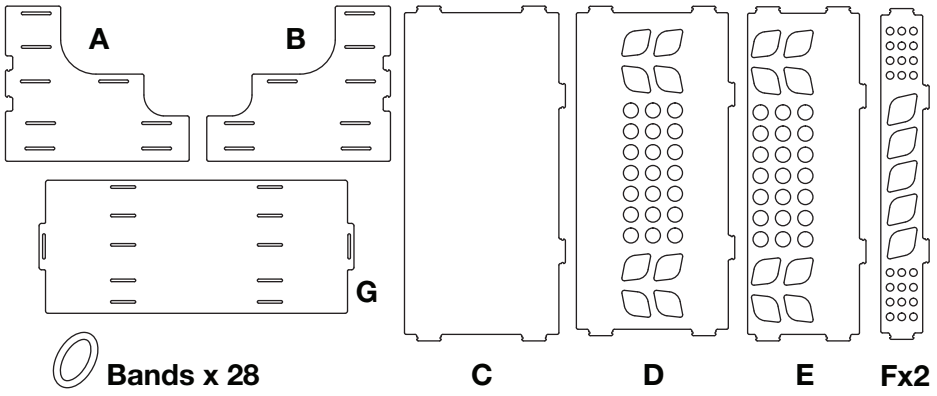


### Step 1

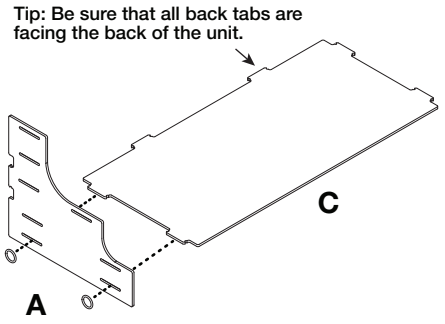


### Step 2

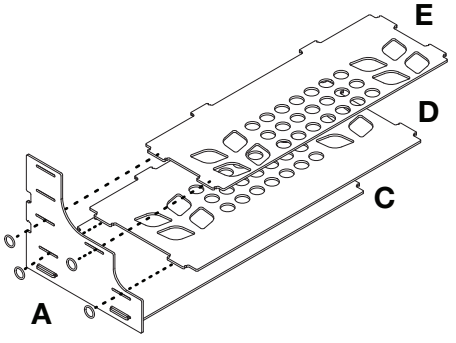


### Step 3

Make sure to align both **F** pieces with football shaped holes going in the same direction.

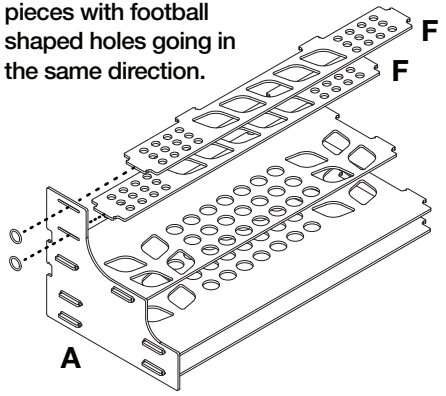


### Step 4

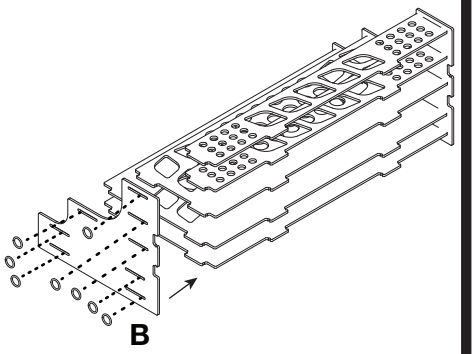


### Step 5

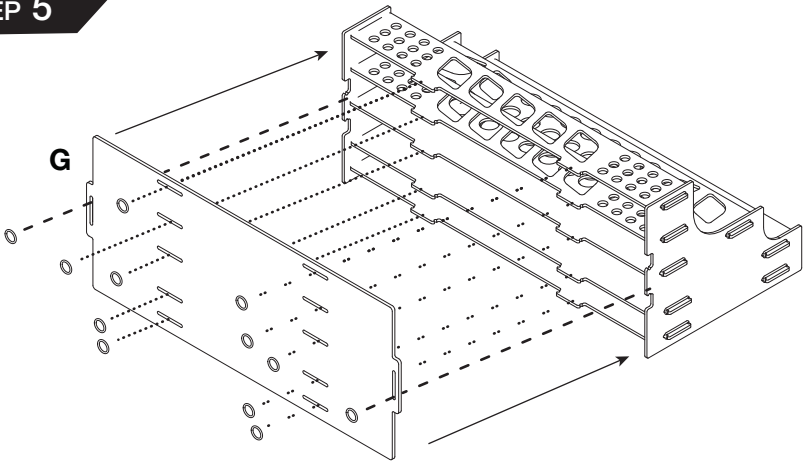


### Complete!

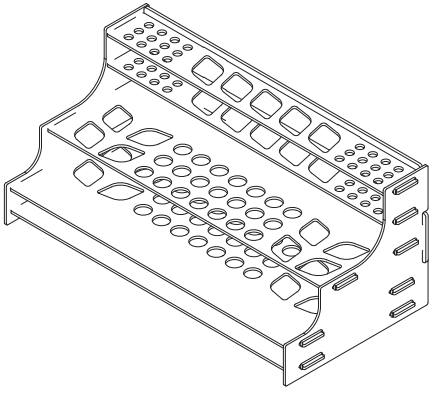

Completed Front View

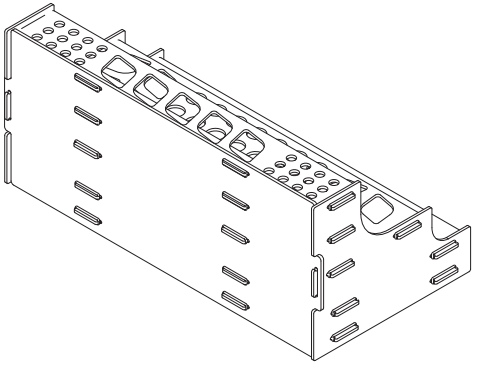

Completed Back View